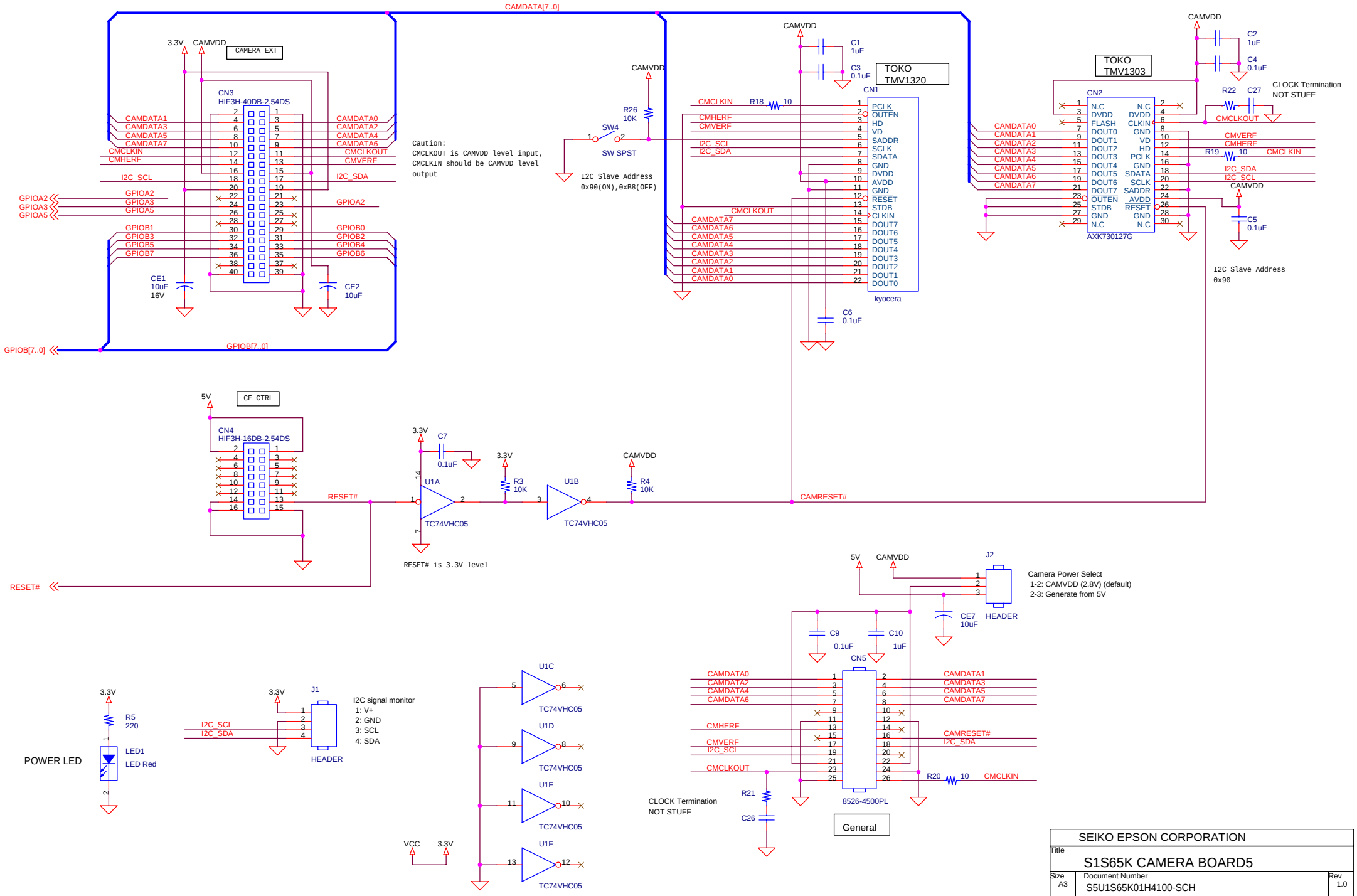
CAMERA EXT
CN3
HIF3H-40DB-2.54DS
CAMDATA[7..0]
CAMDATA1
CAMDATA3
CAMDATA5
CAMDATA7
CMCLKIN
CMHERF
I2C_SCL
GPIOA2
GPIOA3
GPIOA5
GPIOB1
GPIOB3
GPIOB5
GPIOB7
CAMDATA0
CAMDATA2
CAMDATA4
CAMDATA6
CMCLKOUT
CMVERF
I2C_SDA
GPIOA2
GPIOB0
GPIOB2
GPIOB4
GPIOB6
CE1
10uF
16V
CE2
10uF
GPIOB[7..0]
3.3V
CAMVDD
Caution:
CMCLKOUT is CAMVDD level input,
CMCLKIN should be CAMVDD level
output
R26
10K
SW4
SW SPST
I2C Slave Address
0x90(ON),0xB8(OFF)
TOKO
TMV1320
CN1
PCLK
OUTEN
HD
VD
SADDR
SCLK
SDATA
GND
DVDD
AVDD
GND
RESET
STDB
CLKIN
DOUT7
DOUT6
DOUT5
DOUT4
DOUT3
DOUT2
DOUT1
DOUT0
kyocera
R18
10
C1
1uF
C3
0.1uF
C6
0.1uF
TOKO
TMV1303
CN2
N.C
DVDD
FLASH
DOUT0
DOUT1
DOUT2
DOUT3
DOUT4
DOUT5
DOUT6
DOUT7
OUTEN
STDB
GND
N.C
DVDD
CLKIN
GND
VD
HD
PCLK
GND
SDATA
SCLK
SADDR
AVDD
RESET
GND
N.C
AXK730127G
C2
1uF
C4
0.1uF
R22
C27
CLOCK Termination
NOT STUFF
R19
10
C5
0.1uF
I2C Slave Address
0x90
CF CTRL
5V
CN4
HIF3H-16DB-2.54DS
RESET#
C7
0.1uF
U1A
TC74VHC05
R3
10K
U1B
TC74VHC05
R4
10K
CAMRESET#
RESET# is 3.3V level
J2
HEADER
Camera Power Select
1-2: CAMVDD (2.8V) (default)
2-3: Generate from 5V
CE7
10uF
C9
0.1uF
C10
1uF
CN5
8526-4500PL
R20
10
R21
C26
CLOCK Termination
NOT STUFF
General
POWER LED
R5
220
LED1
LED Red
J1
HEADER
I2C signal monitor
1: V+
2: GND
3: SCL
4: SDA
U1C
U1D
U1E
U1F
TC74VHC05
VCC
SEIKO EPSON CORPORATION
Title
S1S65K CAMERA BOARD5
Size
A3
Document Number
S5U1S65K01H4100-SCH
Rev
1.0
Date:
Friday, February 02, 2007
Sheet
1
of
2

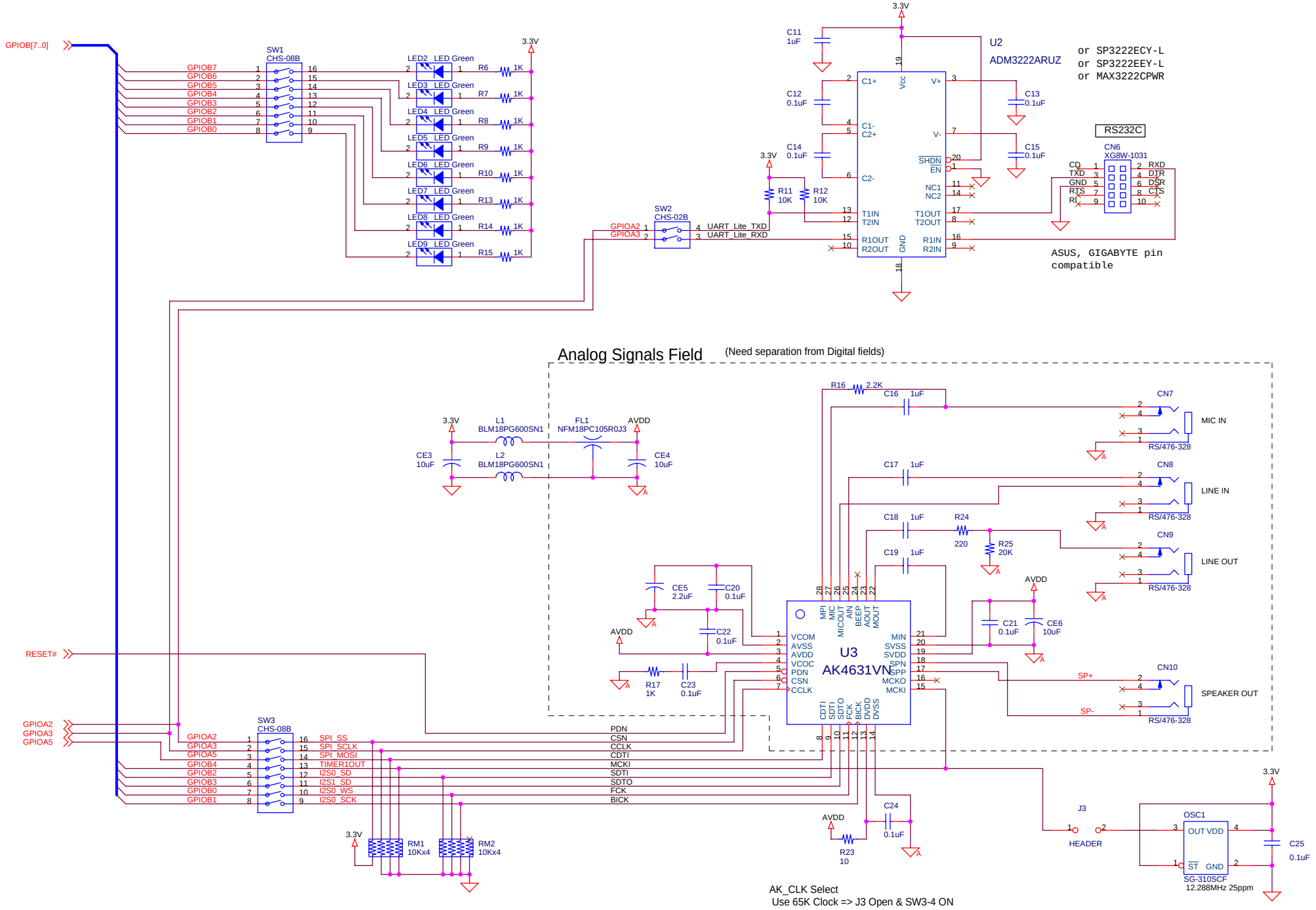

AK_CLK Select
Use 65K Clock => J3 Open & SW3-4 ON
Use OSC1 Clock => J3 Short & SW3-4 OFF

SEIKO EPSON CORPORATION	
Title	S1S65K CAMERA BOARD5
Size A3	Document Number S5U1S65K01H4100-SCH
Rev	1.0
Date:	Friday, February 02, 2007
Sheet	2 of 2