S5U1C17801T1100(SVT17801)

EPSON
EXCEED YOUR VISION

Software eValuation Tool for S1C17801

- evaluation board of S1C17801
- 3.5inch STN QVGA 320×240dot, B&W panel
- Membrane type touch panel
- Support Audio Input/Output
- Memories (SRAM/NOR Flash/NAND Flash/EEPROM)
- IrDA transmission and reception
- with an ICD board (can evaluate without S5U1C17001H)
- A lot of sample programs (refer to User's site)

■ DESCRIPTIONS

S5U1C17801T1100 (Software eValuation Tool for S1C17801. Hereafter referred to as SVT17801)is an evaluation board for MCU S1C17801 manufactured by SEIKO EPSON.
The SVT17801, consisting of the three boards, i.e., CPU, ICD and LCD, can debug software by connecting to the ICD and CPU boards without using ICD or other debug tool. By connecting to the CPU and LCD boards, the SVT17801 can also be used for simple evaluation of LCD panel display.
In addition, serial port, AD input port, and other expansion interfaces built in the SVT17801 allow customer's original expansion boards to connect with the SVT17801.

■ FEATURES

● CPU Board

CPU	S1C17801
Input power voltage	+5.0V (DC)
Regulator output voltage	+3.3V
CPU Input Clock	OSC1:32.768kHz OSC3:48MHz
Built-in Functions/Devices	- Reset switch - Expansion interface connectors (LCD, GPIO, UART, I2C, AD) - ICD board connector - SRAM (16Mbit) - NOR Flash (64Mbit) - NAND Flash (2Gbit) - EEPROM (256Kbit) - Battery backup control circuit/Power switch - Key input circuit (6 keys) - Rotary encoder with switch - Status display LED (tri-color LED/mono-color LED x 2) - Infrared LED/Receiver module - Audio Codec - USB miniB type connector - MMC card socket

● LCD Board

LCD panel module	3.5 inch STN QVGA 320 x 240 dots B&W panel Membrane type touch panel

● ICD Board

Interface with PC	USB 1.1
Supply voltage	USB bus power (On-board regulator output voltage of 3.3V)
Built-in Functions/Devices	- Status display LED (tri-color) - Reset switch - CPU board connector

■ Block Diagram

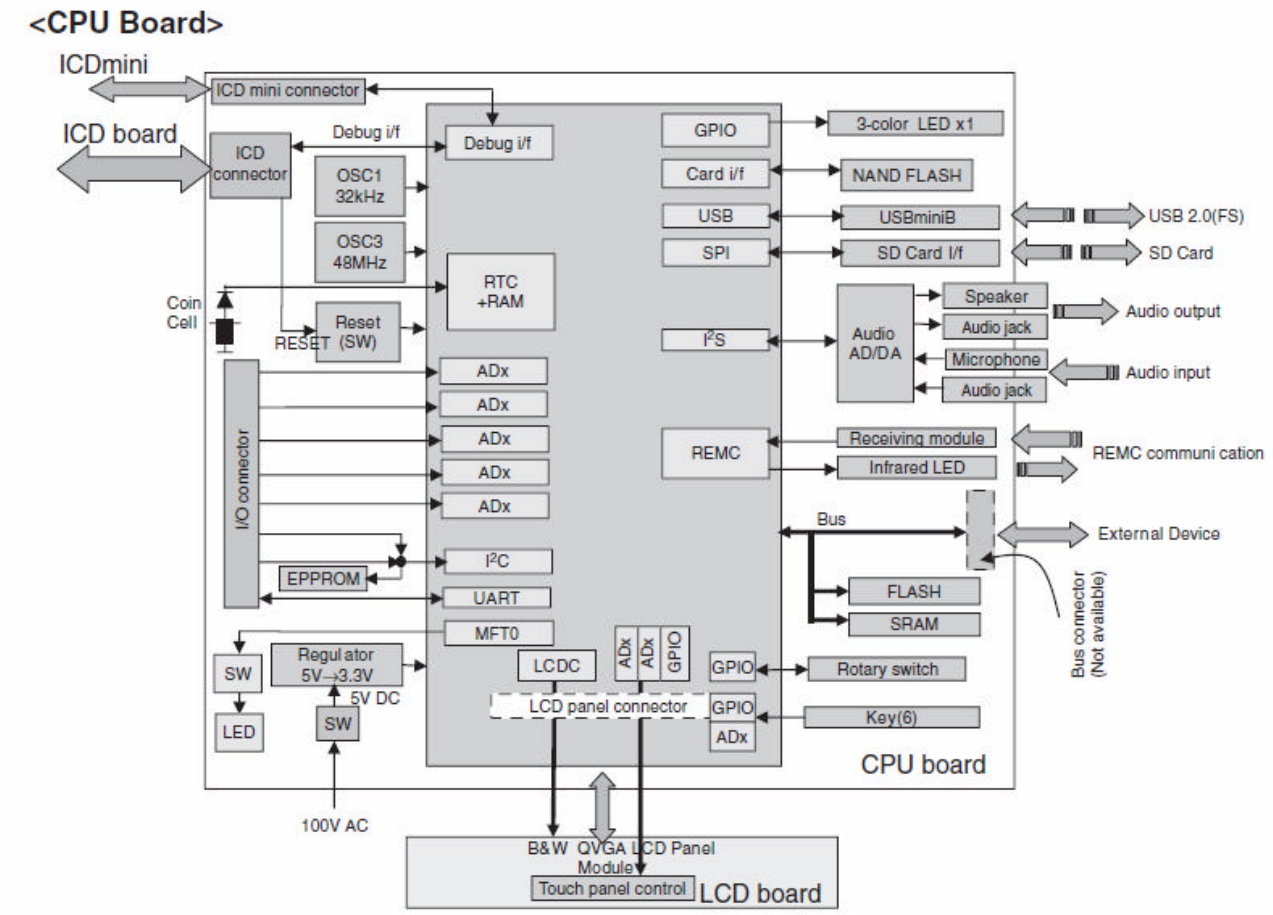

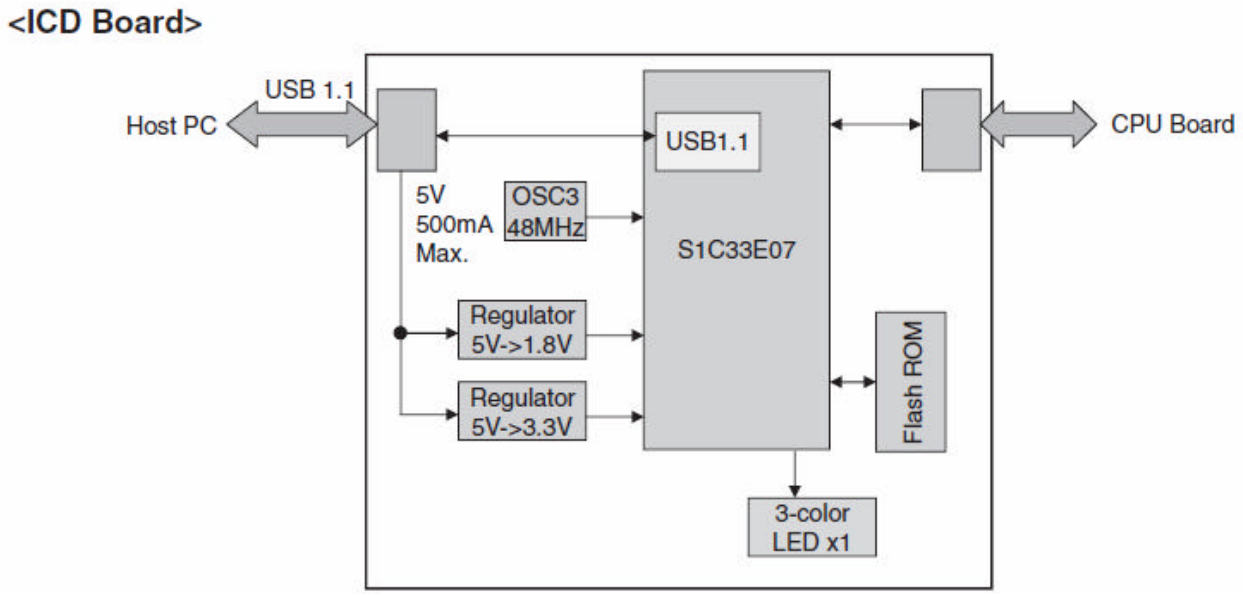

■ Connection Diagram

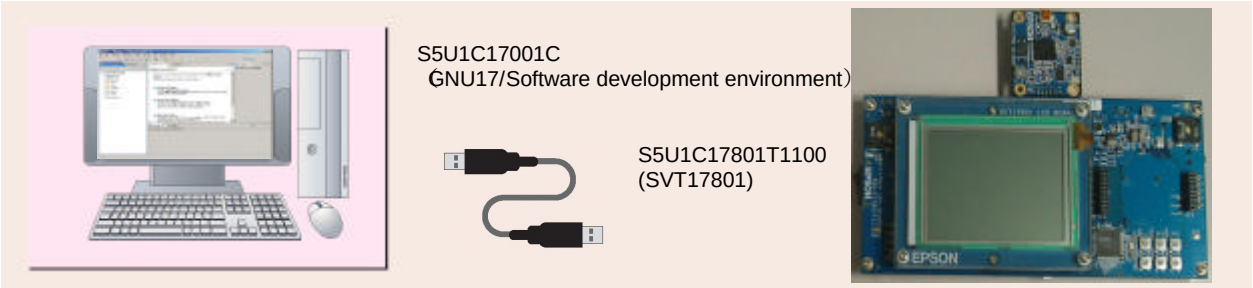

■ Users site list of sample programs

Clock Generator
Real-Time Clock
Flash Controller
Flash Controller (External Memory)
Self-Programming
8-bit Timers
Multi-Function Timer
Watchdog Timer
UART
MAC
I2C
MMC(SPC mode)
I2S
Remote Controller
GPIO
A/D Converter
LCD Controller
USB (mass storage)
USB (rewiting ROM)

NOTICE:

No part of this material may be reproduced or duplicated in any form or by any means without the written permission of Seiko Epson. Seiko Epson reserves the right to make changes to this material without notice. Seiko Epson does not assume any liability of any kind arising out of any inaccuracies contained in this material or due to its application or use in any product or circuit and, further, there is no representation that this material is applicable to products requiring high level reliability, such as, medical products. Moreover, no license to any intellectual property rights is granted by implication or otherwise, and there is no representation or warranty that anything made in accordance with this material will be free from any patent or copyright infringement of a third party. This material or portions thereof may contain technology or the subject relating to strategic products under the control of the Foreign Exchange and Foreign Trade Law of Japan and may require an export license from the Ministry of Economy, Trade and Industry or other approval from another government agency.

©Seiko Epson Corporation 2009, All rights reserved.

SEIKO EPSON CORPORATION

SEMICONDUCTOR OPERATIONS DIVISION

IC Sales Department
IC International Sales Group
421-8 Hino, Hino-shi, Tokyo 191-8501, JAPAN
Phone: +81-42-587-5814 FAX: +81-42-587-5117

■ EPSON Electronic devices Website

http://www.epson.jp/device/semicon_e/

Document code: 411581100
First issue Jan, 2009