EPSON
EXCEED YOUR VISION

S1F77310M0A
Technical Manual

SEIKO EPSON CORPORATION

Rev.1.1

NOTICE

No part of this material may be reproduced or duplicated in any form or by any means without the written permission of Seiko Epson. Seiko Epson reserves the right to make changes to this material without notice. Seiko Epson does not assume any liability of any kind arising out of any inaccuracies contained in this material or due to its application or use in any product or circuit and, further, there is no representation that this material is applicable to products requiring high level reliability, such as, medical products. Moreover, no license to any intellectual property rights is granted by implication or otherwise, and there is no representation or warranty that anything made in accordance with this material will be free from any patent or copyright infringement of a third party. This material or portions thereof may contain technology or the subject relating to strategic products under the control of the Foreign Exchange and Foreign Trade Law of Japan and may require an export license from the Ministry of Economy, Trade and Industry or other approval from another government agency.

All other product names mentioned herein are trademarks and/or registered trademarks of their respective companies.

©SEIKO EPSON CORPORATION 2008, All rights reserved.

Table of Contents

1. OVERVIEW 1
   1.1 Features 1
   1.2 Application 1
   1.3 Package 1
   1.4 Application Circuit Example 1
   1.5 Pin Assignment 2
   1.6 Pin Description 2
   1.7 Truth Table 2
   1.8 Block Diagram 3
2. ELECTRICAL CHARACTERISTICS 4
   2.1 Absolute Maximum Ratings 4
   2.2 Recommended Operating Conditions 4
   2.3 DC Electrical Characteristics 4
   2.4 AC Electrical Characteristics 5
   2.5 Capacitance 5
3. TYPICAL CHARACTERISTICS DIAGRAMS 6
4. TEST DIAGRAMS 7
5. PACKAGE INFORMATION 10
   5.1 Package Outline 10
   5.2 Marking 11
REVISION HISTORY 12

1. OVERVIEW

The S1F77310 series is the bus switch suitable for USB applications. The adopted CMOS process technology characterizes the S1F77310 series by low power consumption. The compact PLP-8 adopted for the package enables the S1F77310 series to be mounted on high-density assemblies.

The built-in level shift circuit eliminates the need of external level shift circuitry for the input to this IC.

1.1 Features

•Input voltage range	: 3.0V to 3.6V
•Low-current consumption	: 14μA (MAX)
•Static current	: 1μA (MAX)
•Bus switch ON resistance	: 5.3Ω (typ)
•Bus switch OFF capacitance	: 1.7pF (typ)

1.2 Application

- •Mobile communication equipment (mobile phones, cordless phones, and wireless communication devices)
- •Mobile AV equipment
- •Home appliances
- •Cameras, and video equipment
- •Portable game devices
- •Battery-based equipment

1.3 Package

- •PLP-8 (1.60mm × 1.60mm)

1.4 Application Circuit Example

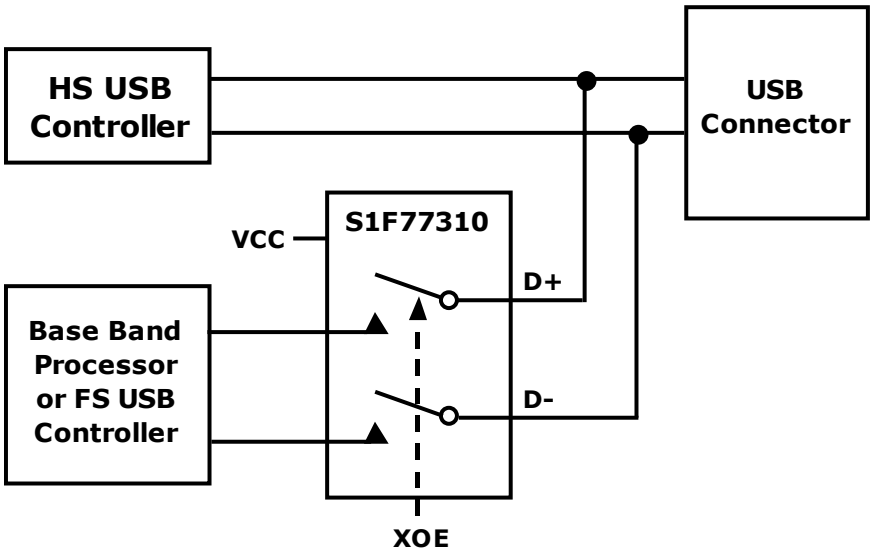

Fig.1 Application Circuit Example

1.5 Pin Assignment

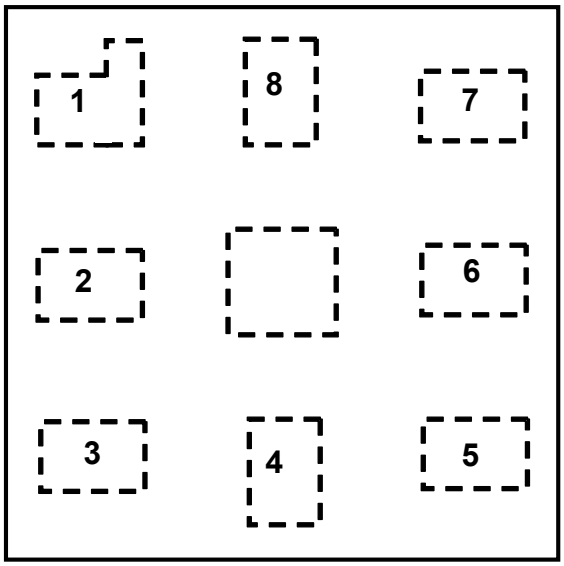

(TOP VIEW)

Fig.2 Pin Assignment

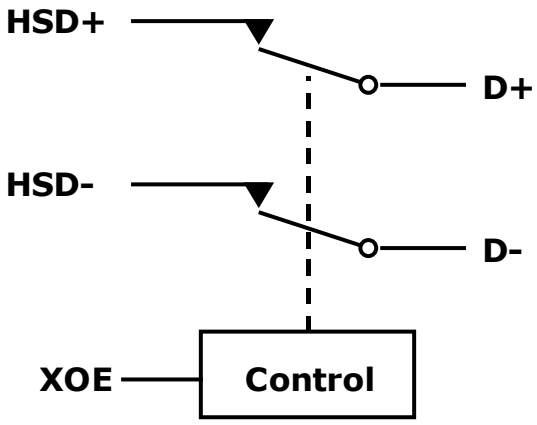

Fig.3 Bus switch symbol

* Central land area in this IC is not used. Do not mount any pin.

1.6 Pin Description

Pin No.	Pin Name	Pin Description
1	XOE	Bus switch enable input pin
2	HSD+	Data port (+)
3	D+	Data port (+)
4	GND	GND pin
5	D-	Data port (-)
6	HSD-	Data port (-)
7	(NC)	Nc pin
8	VCC	Power supply pin

1.7 Truth Table

XOE	Bus Switch status
HIGH	Disconnected
LOW	HSD+ =D+, HSD- =D-

1.8 Block Diagram

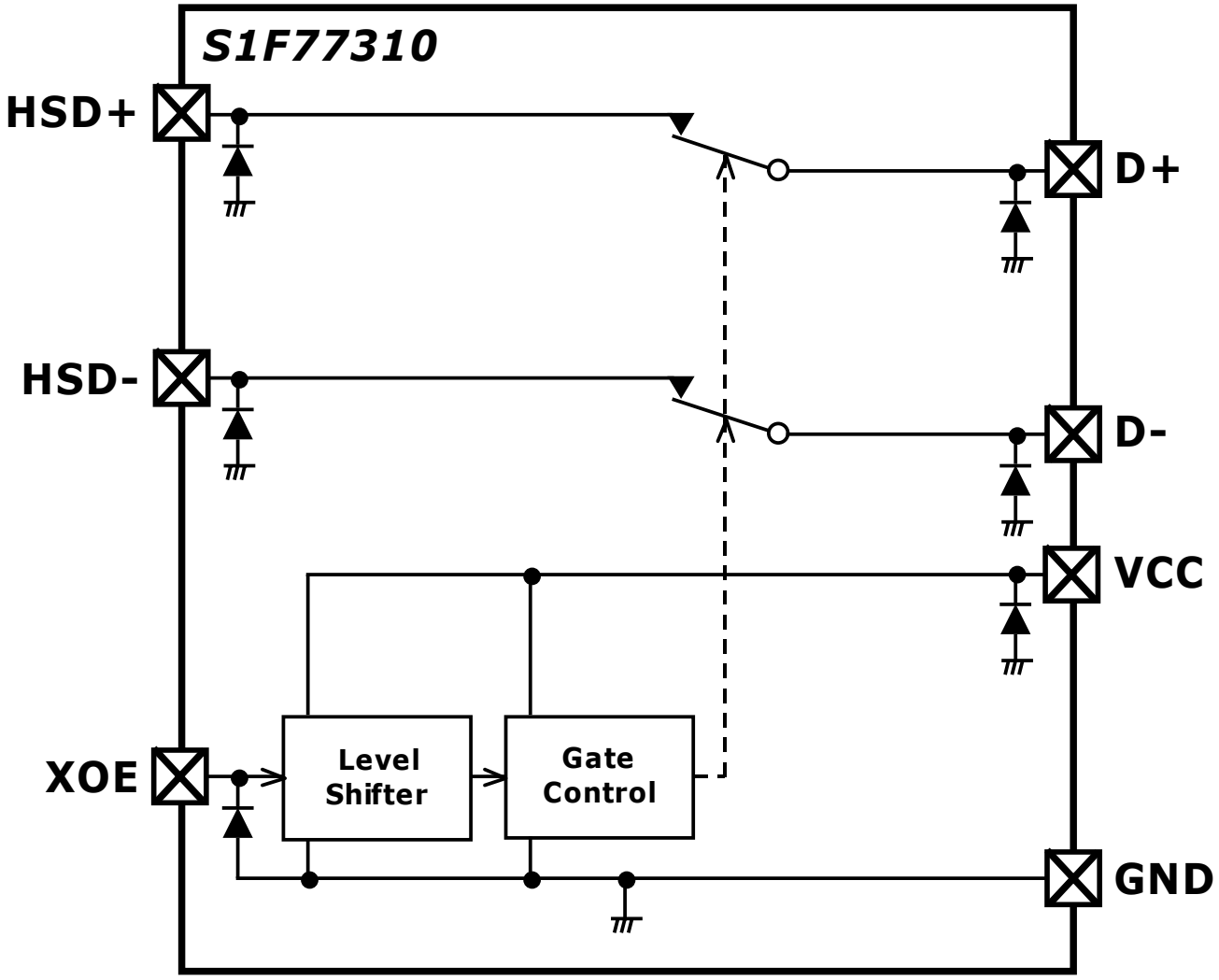

Fig.4 Block diagram

2. ELECTRICAL CHARACTERISTICS

2.1 Absolute Maximum Ratings

Item		Symbol	Min.	Max.	Unit
Supply voltage		V_{CC}	-0.3	4.6	V
Input pin voltage	XOE	V_{IN}	-0.3	7.0	V
Switch input voltage	HSD+,HSD-,D+,D-	V_{SW}	-0.3	7.0	V
Storage temperature		T_{STG}	-65	150	°C

2.2 Recommended Operating Conditions

Item		Symbol	Min.	Max.	Unit
Supply voltage		V_{CC}	3.0	3.6	V
Input pin voltage	XOE	V_{IN}	0.0	5.5	V
Switch input voltage	HSD+,HSD-,D+,D-	V_{SW}	0.0	5.5	V
Operating temperature		T_a	-40	85	°C

2.3 DC Electrical Characteristics

(Unless otherwise specified: Ta=-40°C to 85°C)

Item	Symbol	Conditions	Vcc[V]	Min.	Typ.	Max.	Unit
Clamp diode voltage	V_{IK}	I_L=18mA	3.0			-1.2	V
High Level Input voltage	V_{IH}		3.0 to 3.6	1.2			V
Low Level Input voltage	V_{IL}		3.0 to 3.6			0.4	V
Input Leakage current	I_{IN}	$0V \le V_{IN} \le V_{CC}$	3.6 *	-1.0		1.0	μA
OFF Stage Leakage current	I_{OZ}	$0V \le V_{SW} \le V_{CC}$	3.6 *	-1.0		1.0	μA
Power off Leakage current (D+, D-)	I_{OFF}	$0V \le V_{SW} \le V_{CC}$, V_{CC}=0V	0.0	-2.0		2.0	μA
Switch ON resistance	R_{ON}	V_{SW}=0.4V, I_{ON}, =-8mA	3.0		5.3	8.0	Ω
ΔON resistance	ΔR_{ON}	V_{SW}=0.4V, I_{ON}, =-8mA	3.0		0.35		Ω
ON resistance flatness	R_{ON} (Flat)	$0V \le V_{SW} \le 1V$, I_{ON}=-8mA	3.0		2		Ω
Quiesent current	I_{CC}	V_{IN}=3.6V	3.6			1.0	μA
Current consumption	I_{CCT}	V_{IN}=0V, V_{SW}=2.6V	3.6			14.0	μA

* Describe the value based on the USB full speed standard.

2.4 AC Electrical Characteristics

(Unless otherwise specified: Ta=-40°C to 85°C)

Item	Symbol	Conditions	Vcc[V]	Min.	Typ.	Max.	Unit
Turn ON Time	t_{ON}	R_L=50Ω, C_L=5pF	3.0 to 3.6		5	20	μs
Turn OFF Time	t_{OFF}	R_L=50Ω, C_L=5pF	3.0 to 3.6		21	40	ns
Propagation Delay	t_{PD}	R_L=50Ω, C_L=5pF	3.3		0.25		ns
OFF Isolation	O_{IRR}	R_L=50Ω, C_L=0pF, f=240MHz	3.0 to 3.6		-35		dB
Crosstalk	X_{talk}	R_L=50Ω, f=240MHz	3.0 to 3.6		-40		dB
-3dB Bandwidth	BW	R_L=50Ω, C_L=0pF, f=240MHz	3.0 to 3.6		1000		MHz
Channel to Channel Skew	$t_{SK(O)}$	R_L=50Ω, C_L=5pF	3.0 to 3.6		50		ps
Skew of Opposite Transitions of the Same Output	$t_{SK(P)}$	R_L=50Ω, C_L=5pF	3.0 to 3.6		20		ps
Total Jitter	tj	R_L=50Ω, C_L=5pF, t_R=t_F=500ps at 480Mbps	3.0 to 3.6		200		ps

2.5 Capacitance

(Unless otherwise specified: Ta=-40°C to 85°C)

Item	Symbol	Conditions	Vcc[V]	Min.	Typ.	Max.	Unit
Control input pin capacitance	C_{IN}	V_{CC}=0V, f=1MHz	0.0		7.0		pF
Bus switch ON capacitance	C_{ON}	V_{IN}=0V, f=1MHz	3.3		3.7		pF
Bus switch OFF capacitance	C_{OFF}	V_{CC}=0V, f=1MHz	0.0		1.7		pF

3. TYPICAL CHARACTERISTICS DIAGRAMS

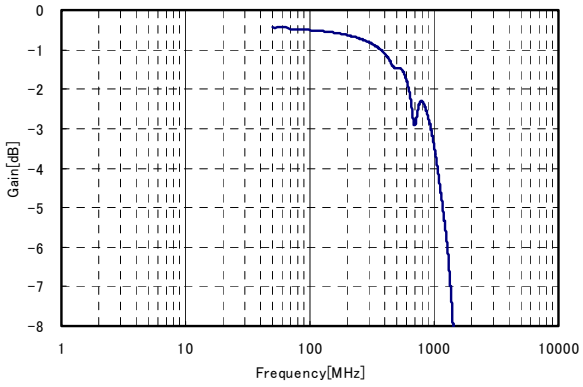

Fig.5 Gain-frequency characteristic

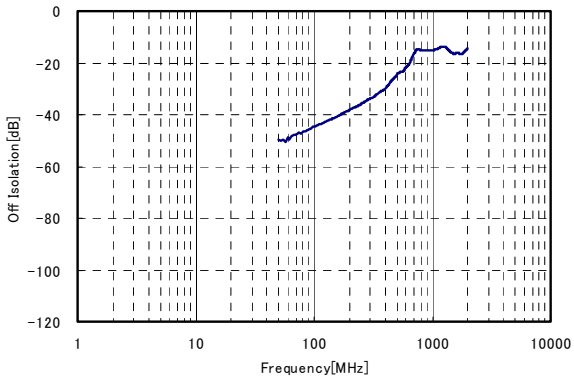

Fig.6 OFF Isolation

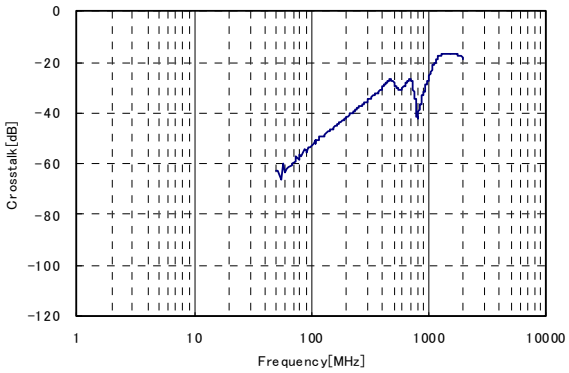

Fig.7 Crosstalk

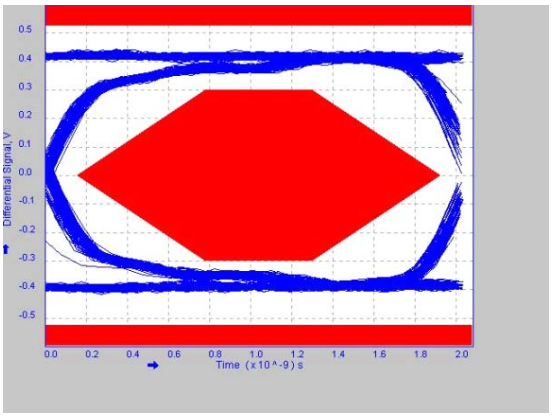

Fig.8 HS-Eye characteristic

4. TEST DIAGRAMS

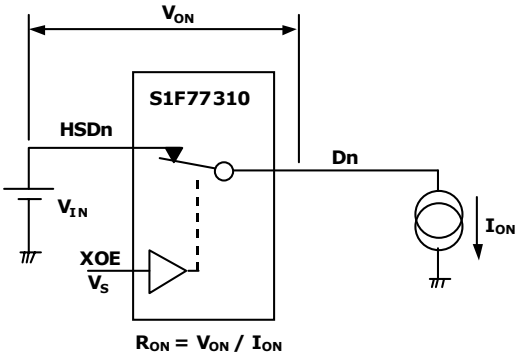

Fig.9 ON resistance

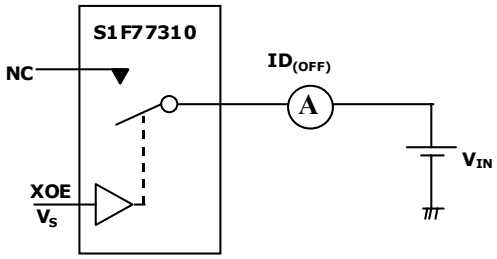

Fig.10 OFF-leakage

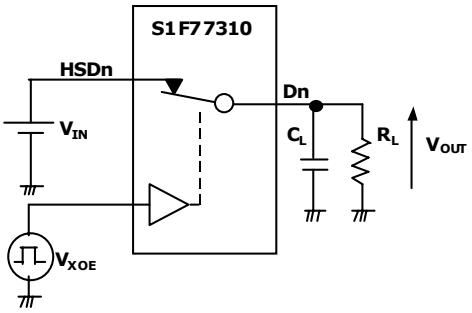

Fig.11 AC characteristic

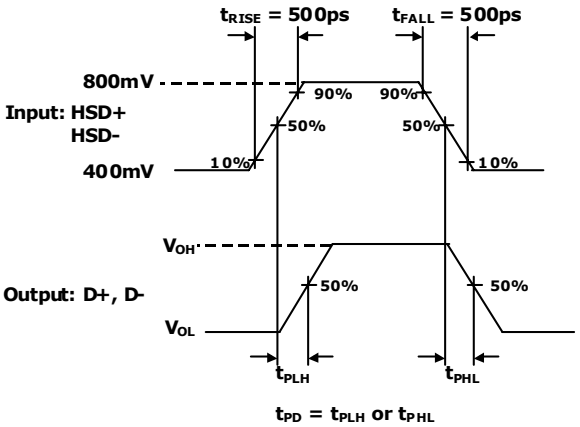

Fig.12 Switch Propagation delay waveform

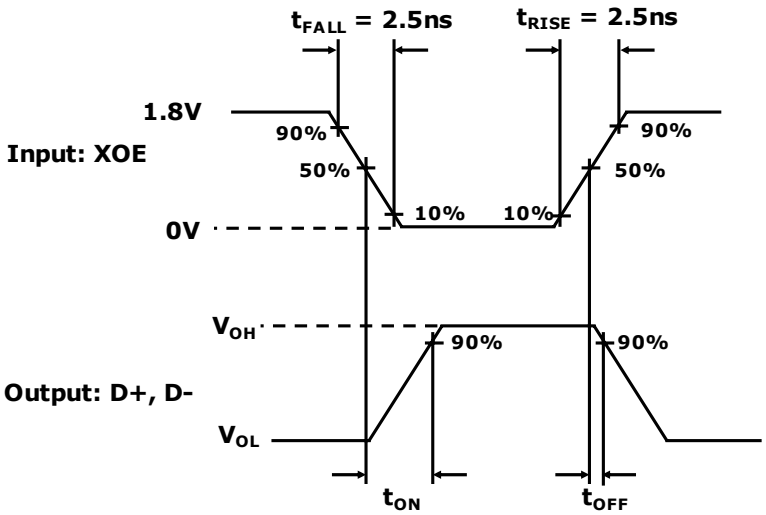

Fig.13 Turn on/Turn off waveform

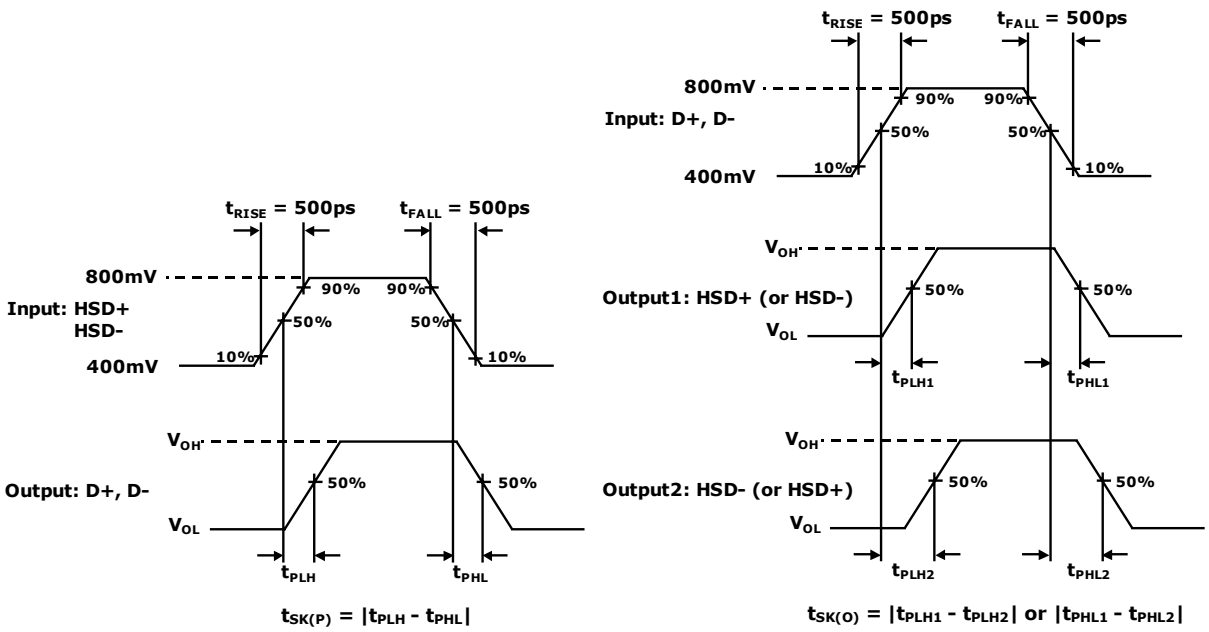

Fig.14 Switch skew test waveform

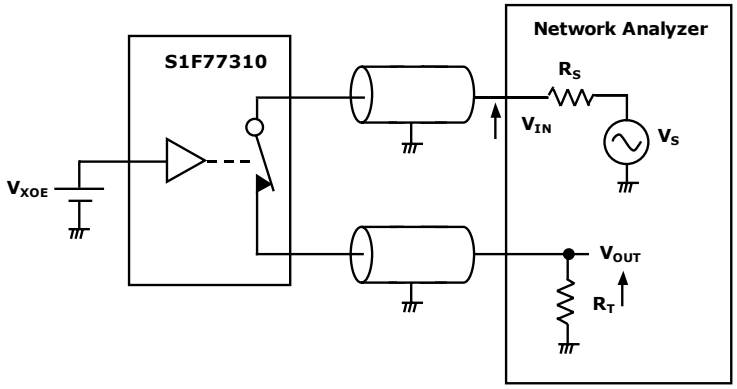

Fig.15 Bandwidth measurement circuit

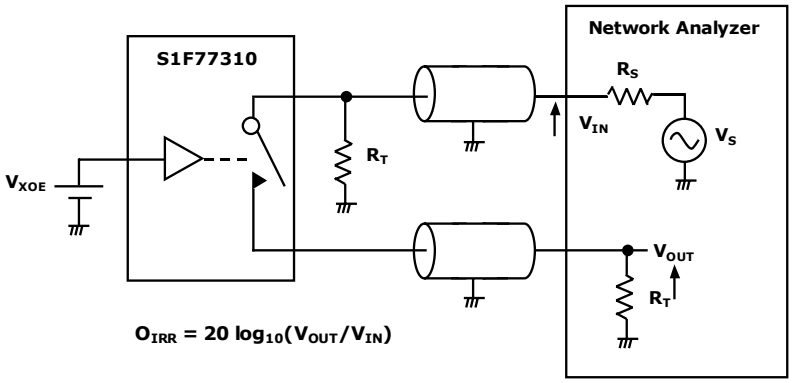

Fig.16 OFF isolation

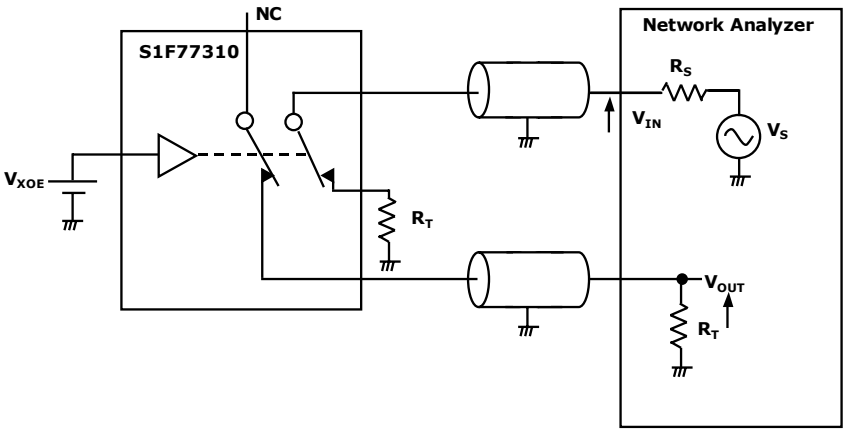

Fig.17 Crosstalk

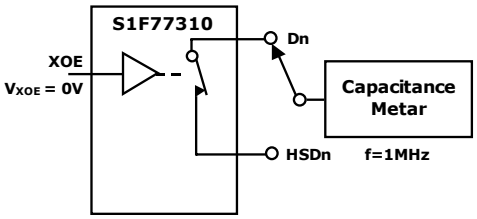

Fig.18 ON capacitance

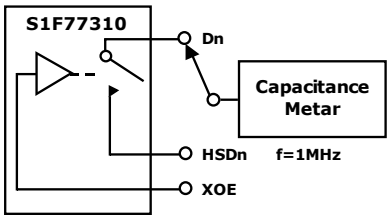

Fig.19 OFF Capacitance

5. PACKAGE INFORMATION

5.1 Package Outline

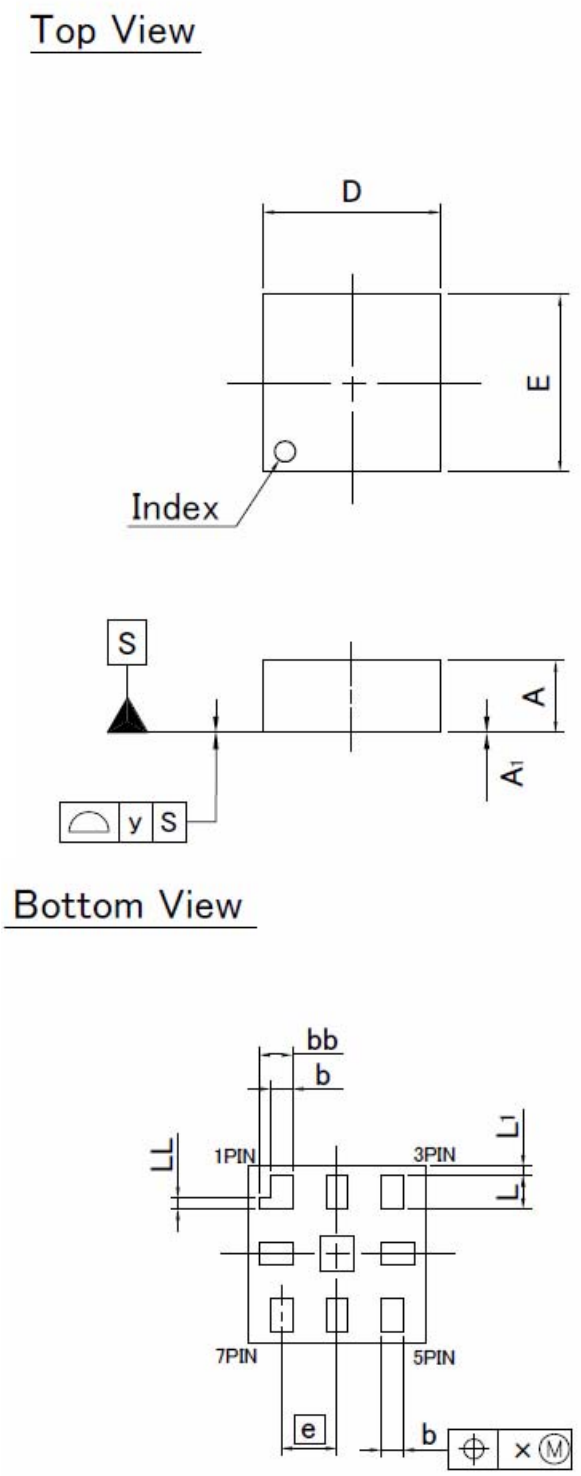

(unit:mm)

Symbol	Dimension in Milimeters		
	Min.	Nom.	Max.
D	—	1.6	—
E	—	1.6	—
A	—	—	0.65
A_1	0	—	—
e	—	0.5	—
b	0.1	—	0.3
bb	0.2	—	0.4
L	0.2	—	0.4
L_1	—	0.09	—
LL	—	0.1	—
x	—	—	0.1
y	—	—	0.08

5.2 Marking

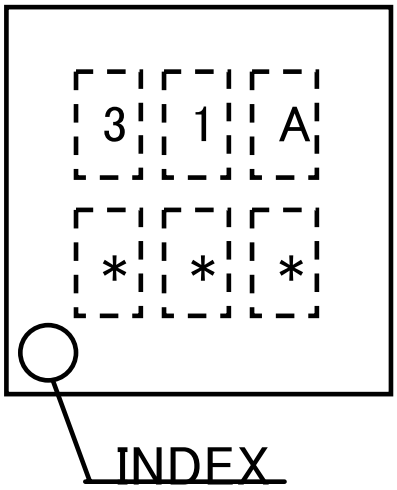

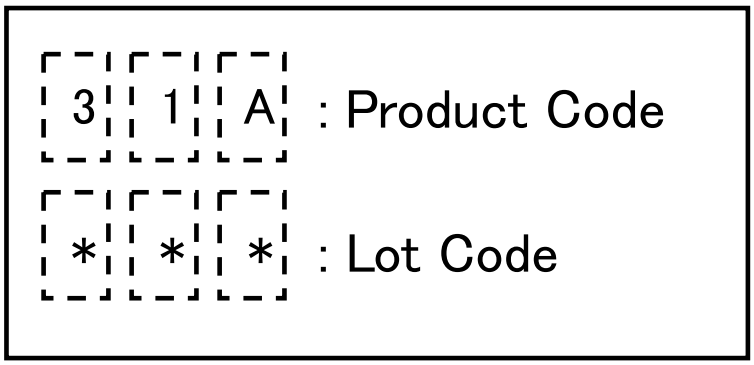

REVISION HISTORY

Date	revision	modification	note
08/05	1.0	New issue	
08/05	1.1	1. Modify descriptions as follows. Recommended Maximum Operating Ratings → Recommended Operating Conditions pin resistance → OFF Capacitance Storage ambient temperature → Storage temperature Operating ambient temperature → Operating temperature Input level “High” → High Level Input Voltage Input level “Low” → Low Level Input Voltage Input terminal leak → Input Leakage Current Switch off leak → OFF Stage Leakage Current Power off leak current → Power off Leakage Current Static current → Quiesentcurrent Capacity → Capacitance Description about note “*” in “2.3 DC Electrical Characteristics”. Description about the unit in external package view 2. Add description “Fig.1 Application Circuit Example”. 3. Correct a writing error in “Fig.13 Turn on/Turn off waveform”.	

EPSON

International Sales Operations

AMERICA

EPSON ELECTRONICS AMERICA, INC.
HEADQUARTERS
2580 Orchard Parkway
San Jose , CA 95131,USA
Phone: +1-800-228-3964 FAX: +1-408-922-0238

SALES OFFICES
Northeast
301 Edgewater Place, Suite 210
Wakefield, MA 01880, U.S.A.
Phone: +1-800-922-7667 FAX: +1-781-246-5443

EUROPE

EPSON EUROPE ELECTRONICS GmbH
HEADQUARTERS
Riesstrasse 15 Muenchen Bayern,
80992 GERMANY
Phone: +49-89-14005-0 FAX: +49-89-14005-110

ASIA

EPSON (CHINA) CO., LTD.
7F, Jinbao Bldg.,No.89 Jinbao St.,
Dongcheng District,
Beijing 100005, China
Phone: +86-10-6410-6655 FAX: +86-10-6410-7320

SHANGHAI BRANCH
7F, Block B, Hi-Tech Bldg., 900, Yishan Road,
Shanghai 200233, CHINA
Phone: +86-21-5423-5522 FAX: +86-21-5423-5512

EPSON HONG KONG LTD.
20/F., Harbour Centre, 25 Harbour Road
Wanchai, Hong Kong
Phone: +852-2585-4600 FAX: +852-2827-4346
Telex: 65542 EPSCO HX

EPSON (CHINA) CO., LTD.
SHENZHEN BRANCH
12/F, Dawning Mansion, Keji South 12th Road,
Hi- Tech Park, Shenzhen
Phone: +86-755-2699-3828 FAX: +86-755-2699-3838

EPSON TAIWAN TECHNOLOGY & TRADING LTD.
14F, No. 7, Song Ren Road,
Taipei 110
Phone: +886-2-8786-6688 FAX: +886-2-8786-6660

EPSON SINGAPORE PTE., LTD.
1 HarbourFront Place,
#03-02 HarbourFront Tower One, Singapore 098633
Phone: +65-6586-5500 FAX: +65-6271-3182

SEIKO EPSON CORPORATION
KOREA OFFICE
50F, KLI 63 Bldg., 60 Yoido-dong
Youngdeungpo-Ku, Seoul, 150-763, KOREA
Phone: +82-2-784-6027 FAX: +82-2-767-3677

GUMI OFFICE
2F, Grand B/D, 457-4 Songjeong-dong,
Gumi-City, KOREA
Phone: +82-54-454-6027 FAX: +82-54-454-6093

SEIKO EPSON CORPORATION
SEMICONDUCTOR OPERATIONS DIVISION

IC Sales Dept.
IC International Sales Group
421-8, Hino, Hino-shi, Tokyo 191-8501, JAPAN
Phone: +81-42-587-5814 FAX: +81-42-587-5117

Document Code: 411494200
First issue July 2008 in JAPAN